THE HONG KONG POLYTECHNIC UNIVERSITY
香港理工大學

Department of Biomedical Engineering
生 物 醫 學 工 程 學 系

CHAN HIU LAM, KYLIE
CHEUNG CHING YEE, JENNY
FONG TSZ CHING, IVY
LIM JOOMI, JOOMI

Supervisor Dr. M.S. WONG
Advisor Dr. Hin Chung LAU

Homecare EX Gloves

Exercise Equipment for the Early Stage of Osteoarthritis

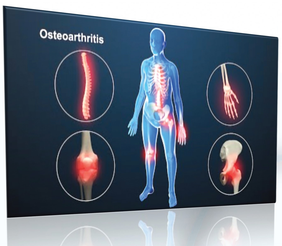

What is Osteoarthritis?

It is a disease caused by loss or damage of joint cartilage, the majority of it is the elderly. (especially in the hands, hips, knees and lower back)

Design Purpose

- HOME(SELF) CARE TREATMENT
- CLEAR INSTRUCTION TO PREVENT INJURY
- ASSISTING EXERCISE
- PROVIDE MOTIVATION

Mobile Application

For patients

- View, save and send data
- Receive monthly report from PT/OT
- Adjust setting of standard exercise pattern

Website

For medical specialists (PT/OT)
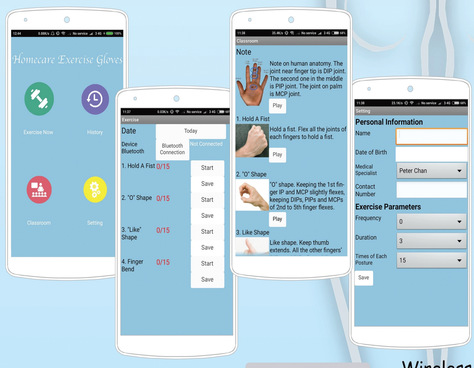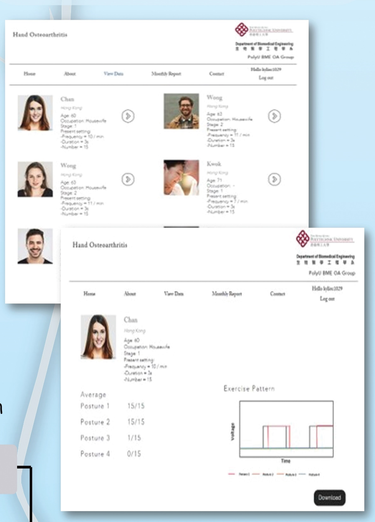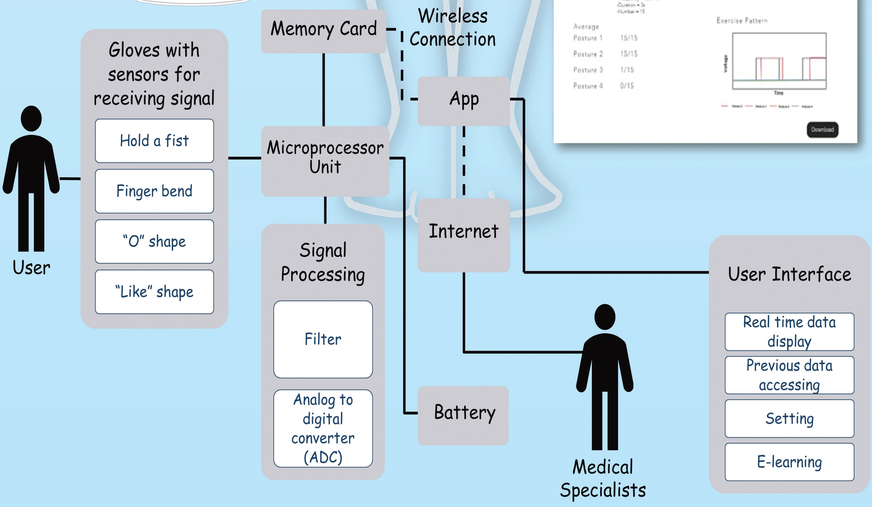
- View and download exercise pattern
- Write and send monthly report